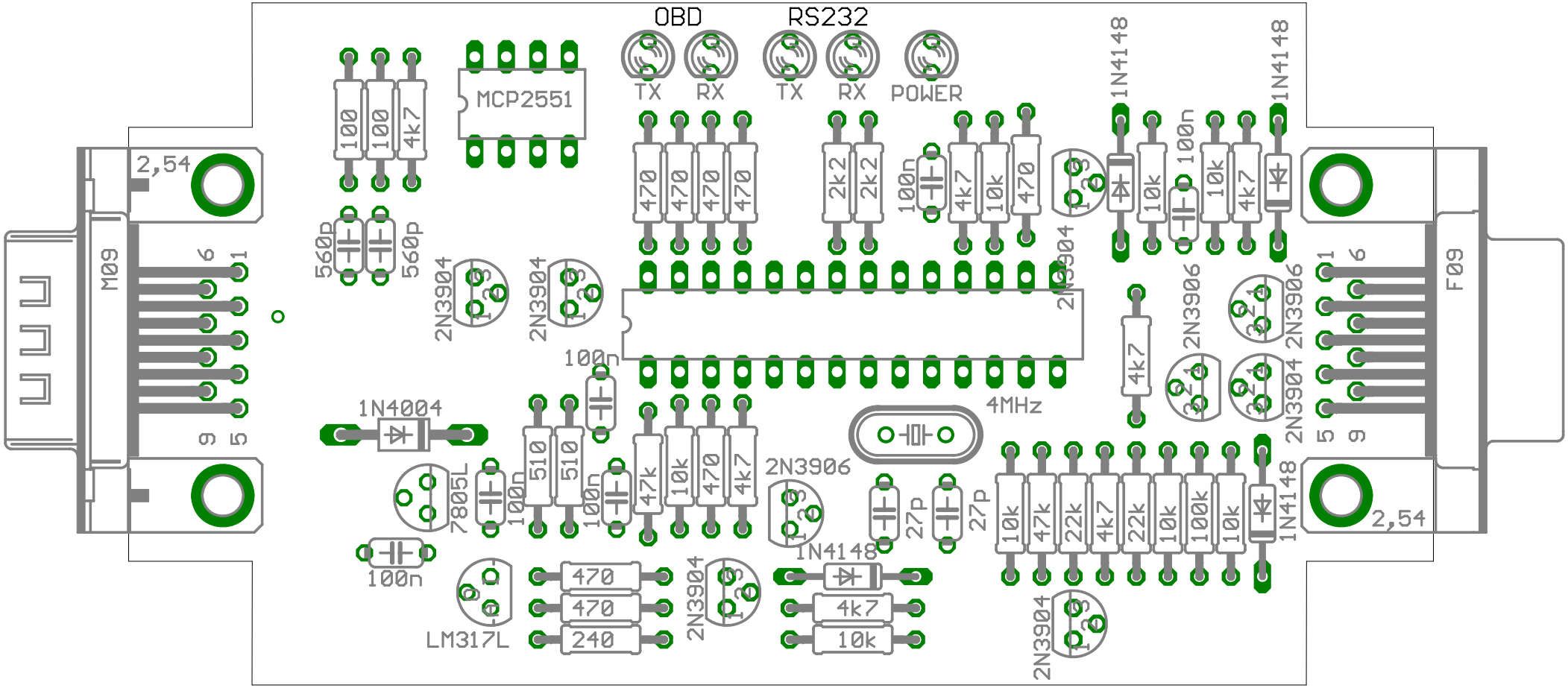
OBD
RS232
TX
RX
TX
RX
POWER
MCP2551
100
100
4k7
2,54
560p
560p
M09
F09
470
470
470
470
2k2
2k2
100n
4k7
10k
470
1N4148
10k
100n
10k
4k7
1N4148
2N3904
2N3904
2N3904
2N3906
2N3906
2N3904
2N3906
4k7
100n
1N4004
4MHz
510
510
100n
47k
10k
470
4k7
2N3906
7805L
100n
27p
27p
10k
47k
22k
4k7
22k
10k
100k
10k
1N4148
2,54
100n
LM317L
470
470
240
2N3904
1N4148
4k7
10k
2N3904